MTKD-N and MTKD-M

Multi-jet dry dial meter for cold water

In use by the million worldwide the MTK will convince you thanks to their high technical standard and high-quality workmanship. The MTKD is equipped with the new ZENNER D-register. MTKD is available in two versions: MTKD-N with 7-digit rollers and magnet pointer for pulse output. MTKD-M with 8-digit rollers register and modulator disc for non-reactive scanning for radio (wireless M-Bus), M-Bus or pulse.

Precise measurement results are achieved, even where the water quality varies or in the most difficult installation situations.

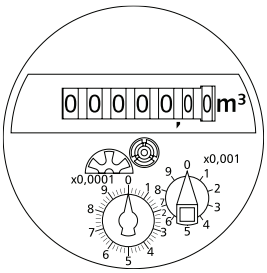

MTKD-N

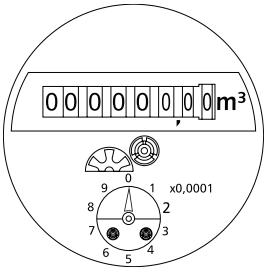

MTKD-M

Performance characteristics in overview

- High-quality UV-resistant plastic inspection window
- Dry dial register with shielded magnetic coupling
- Rotatable and individually inscribable lidring
- Operating temperature up to 30°C, optional up to 50°C
- Operating pressure PN 16
- Water meter for horizontal and vertical installation
- Register available as copper can version (IP 68)
- Version MTKD-N with pulse output (reed) for remote readout
- Standard pulse value 10 l/pulse, optional 1 l/pulse available
- Version MTKD-M with modulator disc for non-reactive scanning
- Approved in accordance with MID

Technical data MTKD-N, MTKDI-N, MTKD-M							
Permanent flow	Q_3	m³/h	2,5	4	6,3	10	10
Comparable to nominal flow (EWG)	Qn	m³/h	1,5	2,5	3,5	6	6
Attainable measuring range	Q_3/Q_1	R	100H/31,5V	160H/40V	125H/50V	160H/50V	160H/50V
Standard measuring range (*)	Q_3/Q_1	R	R25 R80H	R25 R80H	R40 R80H	R40 R80H	R40 R80H
Comparable to metrological class (EWG)	class		A / B-H	A / B-H	A / B-H	A / B-H	A / B-H
Overload flow (**)	Q_4	m³/h	3,13	5	7,88	12,5	12,5
Minimum flow (**)	Q_1	l/h	100 / 31H	160 / 50H	158 / 79H	250 / 125H	250 / 125H
Start-up flow rate	-	l/h	<10	<10	<18	<18	<18
Display range	min	l	0,02	0,02	0,02	0,02	0,02
	max	m³	R8 99999.999 R7 99999.99	R8 99999.999 R7 99999.99	R8 99999.999 R7 99999.99	R8 99999.999 R7 99999.99	R8 99999.999 R7 99999.99
Maximum temperature	-	°C	30	30	30	30	30
Operating pressure, max.	PN	bar	16	16	16	16	16
Pulse value		l/pulse	1/10	1/10	1/10	1/10	1/10
Dimensions:							
Nominal diameter	DN	mm	15	20	25	25	32
		inch	½"	¾"	1"	1"	1 ¼"
Overall length without connectors (*)	L2	mm	165/170	190	260	260	260
Overall length with connectors approx.	L1	mm	245/250	286	378	384	384
Thread meter G x B	D1	inch	¾"	1"	1 ¼"	1 ¼"	1 ½"
Thread connector R x	D2	inch	½"	¾"	1"	1"	1 ¼"
Width approx.	B	mm	95	95	95	95	95
Height (plastic glass) approx.	H1 k*	mm	120	120	120	120	120
	H2	mm	35	25	35	40	40
	H3	mm	15	15	15	15	15
Weight approx.	-	kg	1,2	1,3	2,1	2,1	2,1

(*) Other measuring ranges (R) and overall lengths on request. (**) The data refer to the standard measuring range
k* plastic glass

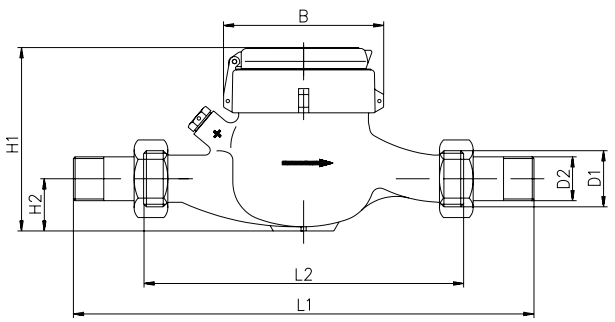

Dimensions MTKD-N/ -M, MTKD-L-N/ -M

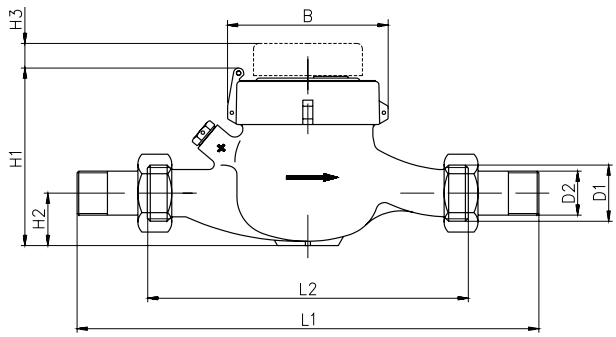

Dimensions MTKDI-N, MTKDI-L-N with pulser